SN identification method

The production date of the product can be determined from the serial number on the product label, as illustrated below. The serial number of the battery module corresponds to the production date.

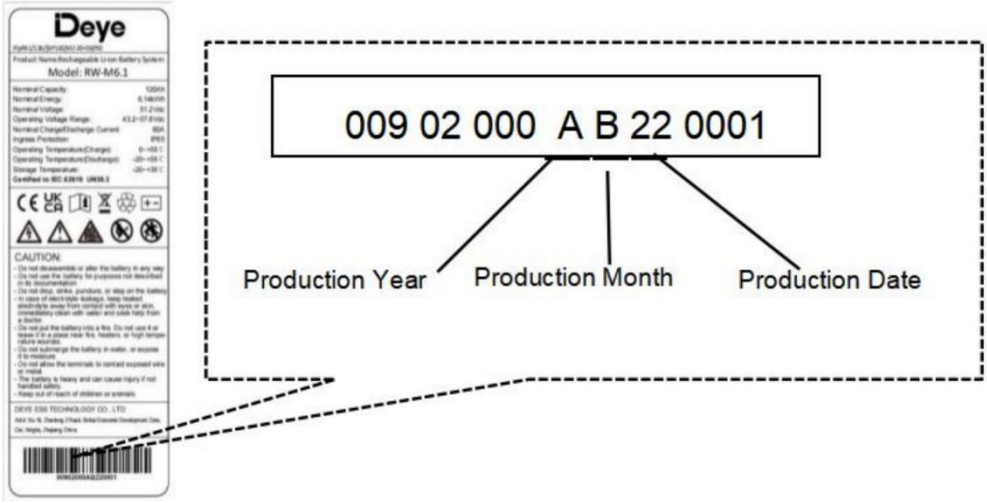

009	02	000	A	B	22	0001
			Year	Month	Day	

The year of production： The 9th digit represents the year of production, in capital letters.The year 2022 is A, 2025 is D and so on. The 26-letter cycle ends and continues from A.

The month of production： The 10th digit represents the month of production, 1 to 9 in numerals, A for 10, B for 11, C for 12.

The date of production： The 11th digit represents the date of production, 01 to 31.

TIPS：

BOS-GM5.1=BOS-G

BOS-G Pack5.1=BOS-G Pro

GB-LM4.0=GB-L

GB-L- Pro-Pack4.09=GB-L- Pro

deye.shop · support@deye.shop · 8 800 201-76-60

BOS-W Extension

NOTICE: Do contact the after-sales staff at Deye before battery system expansion.Otherwise it will affect the warranty.

1.In-Cluster capacity extension

The solution of customer's original BOS-W system extension along with new BOS-W.

Step 1: Verify the battery serial number (SN). If the manufacturing date difference between the new and old batteries is within one years, capacity extension is allowed.

Step 2: Prior to the extension, ensure the original system is fully charged to 100% State of Charge (SOC), and the new battery is also charged to 100% SOC. If fewer than 5 pcs batteries are being added, use the charger for charging; if 5 pcs or more than 5 pcs batteries are added, use the inverter for charging. For further details, please contact the after-sales staff at Deye.

Note: a. When charging 5 pcs or more than 5 pcs BOS-W battery packs to full capacity using an inverter, the high-voltage box will display a SOC of 100% and a current reading of 0A.

b.For single-pack charging procedures, adhere to the BOS-W battery pack charging manual. If you need to check whether the battery pack of the single package is full charge, the historical data read by the upper computer shall prevail.

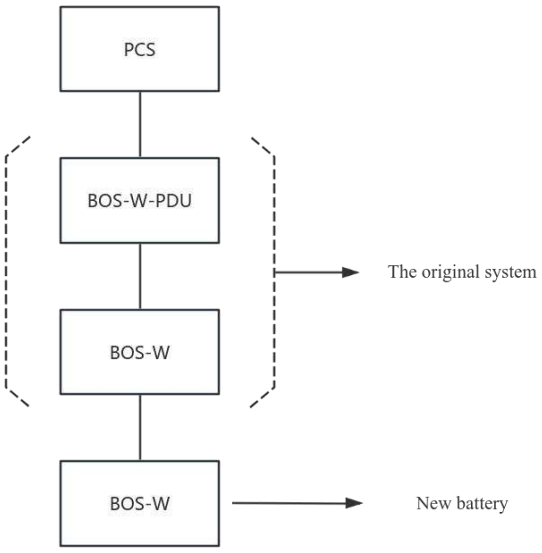

Figure 1 Network diagram

2. Cluster and cluster capacity extension

The solution of customer's original BOS-W system extension along with new BOS-W cluster.

Step 1: Verify the battery serial number (SN). If the manufacturing date difference between the new and old batteries is within two years, capacity extension is allowed.

Step 2: Update the firmware of the original system and the new system's BOS-W high voltage box to the same version. (Seek assistance from Deye staff for the update.)

Step 3: Charge the original BOS-W system and the new BOS-W system to full capacity, then connect them to the combiner box.

Step 4: Initiate BOS-W BMS 1 (master) first, and subsequently activate BOS-W BMS 2 (slave) once the BMU has been fully recognized.

Step 5: Please attach a terminal resistance to the out port of the last HV box when cofronting a parallel communication issue. (The last HV box is BOS-W-PDU(BMS2) as figure 2)

Items to note:

1. Please ensure to purchase the 300A Combiner box manufactured by Deye before proceeding with the extension. (Combiner box material number: 10100802000004)

2. The quantity of batteries under all high-voltage boxes must be kept uniform to maintain an equal voltage level.

3. It is recommended to fully charge the battery cluster that needs expansion separately from the original battery cluster, and then perform the parallel connection.

4.The number of battery packs for the battery cluster that needs to be expanded should be the same as that of the original battery system.

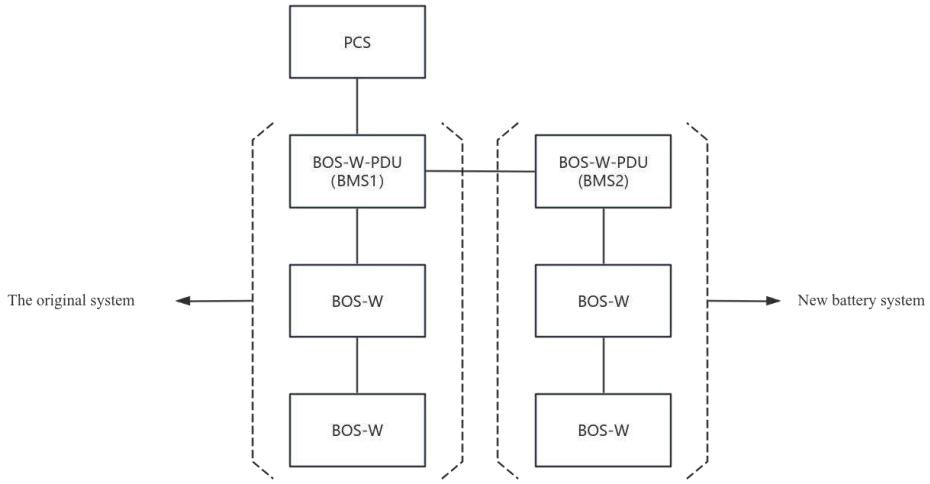

Figure2 Network diagram

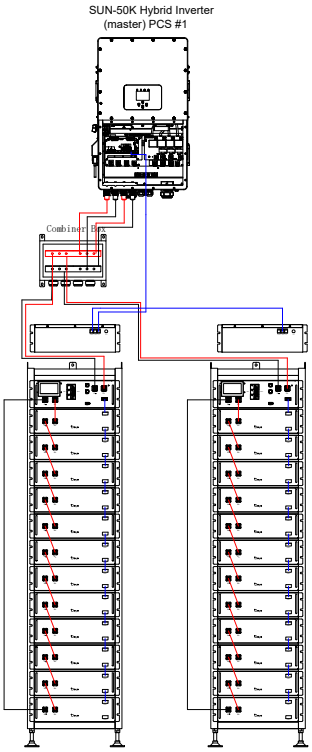

Figure 3 Cluster and cluster capacity extension wiring diagram

3.BOS-W Single Pack Recharge Operation Guidance

4.Charging Tools

PN	SN
B+/B+Battery connecting line single PIN	30221107000063
B-/B-Battery connecting line single PIN	30221107000446
Supplementary charging harness UL2426 22AWG black 2-pin	30221105000071
BMS-BMU battery communication line	30221105000528
P+ orange terminal connector	30220405000239
P- Black terminal connector	30220405000238
CAN BOX	30314100000041

deye.shop

Поддержка на русском — deye.shop

Официальный дилер Deye в России — ООО «НТ»

Мы отвечаем на русском языке по любому оборудованию Deye из этого документа.

- Подберём инвертор и аккумуляторы под ваш дом или объект.
- Ответим на вопросы по монтажу, настройке и кодам ошибок.
- Поможем с гарантийным обращением.

Телефон	8 (800) 201-76-60, звонок по России бесплатный
Техническая поддержка	support@deye.shop
Заказы и счета	zakaz@deye.shop
Сайт	deye.shop

На сайте — документы на русском, цены с НДС и наличие на складах в Ростове-на-Дону, Подмосковье и Краснодаре. Работаем в будни с 9:00 до 18:00 по Москве.